C-50SCA

Available in four configurations, RAB in-line connectors enable RAB fixtures to be mounted to an assortment of RAB arms. Connectors come in black, white and bronze to match RAB fixtures.

Color: Bronze

Weight: 0.2 lbs

Project:	Type:
Prepared By:	Date:

Technical Specifications

Electrical

Connector:

Inline conduit box connector 180° 1/2" NPS. Use to connect RAB fixtures to RAB arms for added versality.

Construction

Material:

Precision die cast aluminum.

Hardware:

Stainless Steel screws

Finish:

Our environmentally friendly polyester powder coatings are formulated for high-durability and long-lasting color, and contains no VOC or toxic heavy metals.

Dimensions

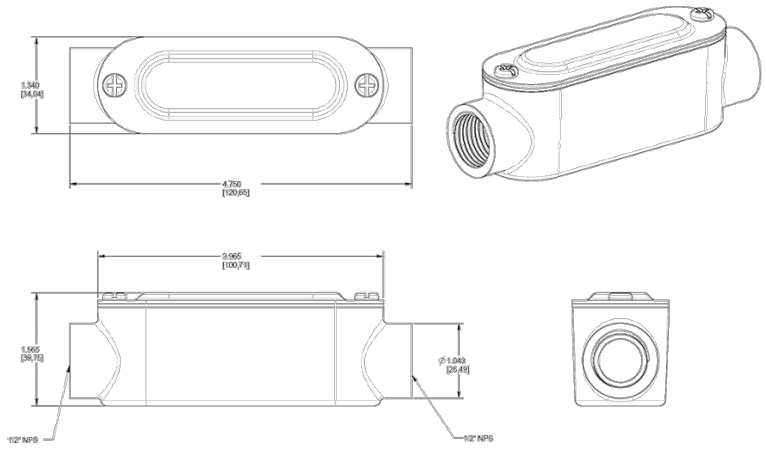

Features

Provides a splice box that matches RAB bronze, black or white fixtures

Use to connect RAB fixtures to RAB arms for added versality

Copyright © 2014 RAB Lighting Inc. All Rights Reserved Note: Specifications are subject to change at any time without notice