LFP16W

PAR16 floodlight with die cast aluminum housing, integral glare shield and tempered lens. Sleek good looks with minimal size. Supplied with 6" leads and ground wire. Medium base PAR16 lamp, 60 Watt max. Lamp not supplied.

Color: White

Weight: 0.8 lbs

Project:	Type:
Prepared By:	Date:

Lamp Info		Ballast Info	
Type:	PAR16	Type:	N/A
Watts:	60W	120V:	N/A
Shape/Size:	N/A	208V:	N/A
Base:	N/A	240V:	N/A
ANSI:	N/A	277V:	N/A
Hours:	2,000	Input Watts:	0W
Lamp Lumens:	650		
Efficacy:	N/A		

Technical Specifications

Listings

UL Listing:

Suitable for wet locations. Suitable for mounting within 1.2m (4ft) of the ground.

Construction

Swivels:

1/2" NPS threaded arm with serrated locking swivel fits all standard mounting boxes. EZ Grip locknuts color matched to fixture.

Housings:

Precision die cast aluminum.

Compatibility:

Fixture is compatible with GE and Sylvania Par16 lamps. Not compatible with Philips Par16 lamp.

Electrical

Voltage:

120

Sockets:

Medium base porcelain with all copper current carrying components and spring loaded center contact.

Dimensions

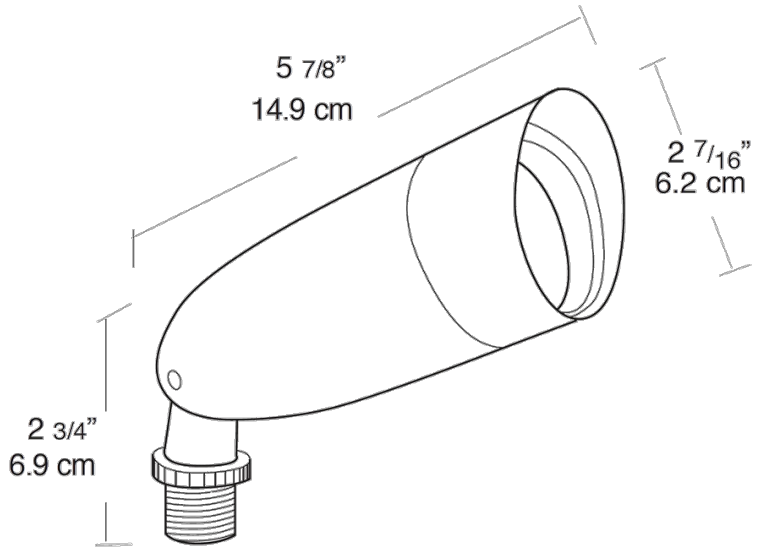

Features

- Rugged die cast aluminum housing with polyester powder coat finish
- Deep Glare Shield
- weatherproof lens and gasket
- "O" Ring seal for full weather protection
- No-rust brass & stainless steel external hardware
- Rugged mounting arm has 1/2" threads and pivots 180
- EZ Grip locknuts are color matched to fixture and can be tightened with fingers, pliers or screwdriver

Copyright © 2014 RAB Lighting Inc. All Rights Reserved Note: Specifications are subject to change at any time without notice