RDDLED2S-10D-20NHC-M-STL

2" deep regress downlight delivers higher lumen output and reduces glare.

Color: Silver trim matte cone

Weight: 2.9 lbs

Project:	Type:
Prepared By:	Date:

Driver Info

Type:	Constant Current
120V:	0.11A
208V:	0.07A
240V:	0.06A
277V:	0.05A
Input Watts:	12W
Efficiency:	84%

LED Info

Watts:	10W
Color Temp:	4000K
Color Accuracy:	93 CRI
L70 Lifespan:	100000
Lumens:	828
Efficacy:	70 LPW

Technical Specifications

Listings

UL Listing:

Suitable for Wet Locations. Covered Ceiling Mount Only.

ENERGY STAR® V2.0:

This product is ENERGY STAR® Version 2.0 Certified.

Electrical

Driver:

Constant Current, Class 2, 120-277V, 50/60 Hz, 120V: 0.11A, 208V: 0.07A, 240V: 0.06A, 277V: 0.05A

Dimming Driver:

0 - 10V (at 120-277V), TRIAC and ELV (at 120V only).

THD:

16.2% at 120V, 26.2% at 277V

Power Factor:

98.4% at 120V, 90.3% at 277V

Surge Protection:

4kV

Optical

Optics:

20° beam

LED Characteristics

Lifespan:

100,000-hour LED lifespan based on IES LM-80 results and TM-21 calculations.

LEDs:

Long-life, high-efficiency, surface mount LEDs.

Color Stability:

LED color temperature is warrantied to shift no more than 200K in CCT over a 5 year period.

Construction

Cold Weather Starting:

Minimum starting temperature is -35°C (-31°F)

Maximum Ambient Temperature:

Suitable for use in 40°C (104°F) ambient temperatures

Housing:

Specification-grade, die-cast aluminum construction

Reflector:

Vacuum metalized polycarbonate

Trim Ring:

Silver powder coated die cast trimless ring.

Trim Cone:

Matte silver square trim cone.

Lens:

Optical grade polycarbonate

Green Technology:

Mercury and UV free. RoHS compliant components. Polyester powder coat finish formulated without the use of VOC or toxic heavy metals.

Other

Replacement:

Replaces 75W MR16

Warranty:

RAB warrants that our LED products will be free from defects in materials and workmanship for a period of five (5) years from the date of delivery to the end user, including coverage of light output, color stability, driver performance and fixture finish.

Buy American Act Compliance:

RAB values USA manufacturing! Upon request, RAB may be able to manufacture this product to be compliant with the Buy American Act (BAA). Please contact customer service to request a quote for the product to be made BAA compliant.

Copyright © 2018 RAB Lighting Inc. All Rights Reserved Note: Specifications are subject to change at any time without notice

RDDLED2S-10D-20NHC-M-STL

Dimensions

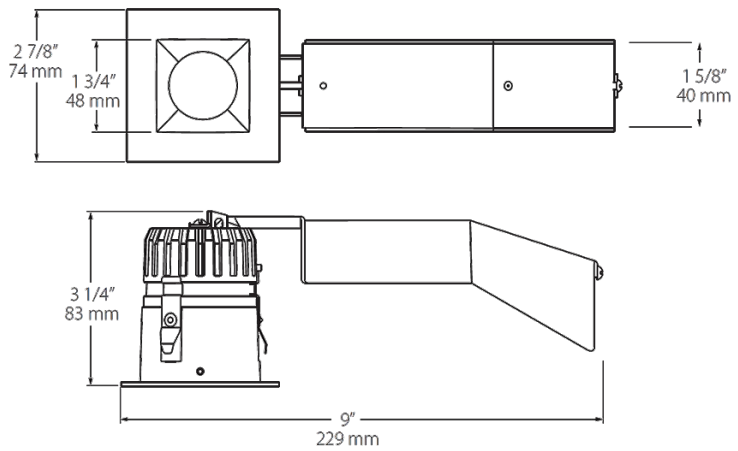

Features

10W replaces 75W MR16

Universal dimming (TRIAC, ELV and 0-10V) for optimal light control

Deep regress design improves visual cutoff and reduces glare

Ordering Matrix

Family	Size/Shape	Wattage	Driver	Optics	Color Temp	CRI	Trim Cone	Trim Ring	Trim Style
RDDLED	2S	10	D	20	N	HC	M	S	TL
	2R = 2" Round **2S** = 2" Square	**10** = 10W	**D** = Dim	**20** = 20 **30** = 30 **40** = 40 **W** = Wall Wash	**YY** = 2700K (Residential Warm) **Y** = 3000K (Warm) **YN** = 3500K (Warm Neutral) **N** = 4000K (Neutral)	**Blank** = 80 CRI **HC** = 90 CRI	**W** = White **B** = Black **S** = Specular **M** = Matte	**W** = White **B** = Black **S** = Silver **SA** = Satin Nickel	**T** = 1/2" Trim **TL** = Trimless

Copyright © 2018 RAB Lighting Inc. All Rights Reserved Note: Specifications are subject to change at any time without notice